# Work Order ID 66622

*Wednesday, February 23, 2011 8:07:23 AM*



**Item ID:** D350-591-312 **Accept** **Setup Start** **Stop**

**Revision ID:**

**Item Name:** Heli-Access-Step, Long RH

**Start Date:** 2/23/2011 **Start Qty:** 10.00 **Cust Item ID:**

**Required Date:** 3/18/2011 **Req'd Qty:** 10.00 **Customer:**

**Reference:**

**Approvals:** **Process Plan:** ___ **Date:** 11-02-22 **Tooling:** ___ **Date:** ___ **Run Start** **Stop**

**QC:** ___ **Date:** ___ **SPC (Y/N):** ___ **Date:** ___

| Sequence ID/ Work Center ID | Operation Description | Set Up/ Run Hours | Tool ID | Tool # | Plan Code | Accept Qty | Reject Qty | Reject Number | Insp. Stamp |
|---|---|---|---|---|---|---|---|---|---|
| **Draw Nbr** | **Revision Nbr** | | | | | | | | |
| D3272 | Rev B | | | | | | | | |
| 100 | DOCUMENT CONTROL | 0.00 | | | | | | | |
| DC | **Memo** | 0.00 | | | | | | | |
| Document Control | Photocopy bluefile and type labels as per PPP D350-591-312 CHG001 | | | | | | | | |
| 110 | Large Fab | 0.00 | | | | 10 | | | |
| Large Fab | **Memo** | 0.00 | | | | | | | |
| Large Fab | 1-Bevel end for welding FWD ONLY<br>2-Weld Support using Jig DT8719, weld Fwd End Plate as per QSI 004 & Dwg D3272<br>A/R Aluminum Rod M108436 M115928<br>3-Grind End Plate flush | | | | | | | | |

BG 11-3-21

11/03/22

11-03-10

Dart Aerospace Ltd

| W/O: | | WORK ORDER CHANGES | | | | | |
|---|---|---|---|---|---|---|---|
| DATE | STEP | PROCEDURE CHANGE | By | Date | Qty | Approval Chief Eng / Prod Mgr | Approval QC Inspector |
| | | | | | | | |
| | | | | | | | |

Part No: _____ PAR #: _____ Fault Category: _____ NCR: Yes No DQA: _____ Date: _____

Resolution: _____ Disposition: _____ QA: N/C Closed: _____ Date: _____

| NCR: | | WORK ORDER NON-CONFORMANCE (NCR) | | | | | | |
|---|---|---|---|---|---|---|---|---|
| DATE | STEP | Description of NC Section A | Corrective Action Section B | | | Verification Section C | Approval Chief Eng | Approval QC Inspector |
| | | | Initial Chief Eng | Action Description Chief Eng | Sign & Date | | | |
| | | | | | | | | |
| | | | | | | | | |
| | | | | | | | | |

**NOTE:** Date & initial all entries

H:\fFORMS\Quality Assurance\approved QA\NCRWO RevE

# Work Order ID 66622

*Wednesday, February 23, 2011 8:07:23 AM*



**Item ID:** D350-591-312 **Accept** **Setup Start** **Stop**

**Revision ID:**

**Item Name:** Heli-Access-Step, Long RH

**Start Date:** 2/23/2011 **Start Qty:** 10.00 **Cust Item ID:**

**Required Date:** 3/18/2011 **Req'd Qty:** 10.00 **Customer:**

**Reference:**

**Run Start** **Stop**

**Approvals:** **Process Plan:** _____ **Date:** _____ **Tooling:** _____ **Date:** _____

**QC:** _____ **Date:** _____ **SPC (Y/N):** _____ **Date:** _____

| Sequence ID/ Work Center ID | Operation Description | Set Up/ Run Hours | Tool ID | Tool # | Plan Code | Accept Qty | Reject Qty | Reject Number | Insp. Stamp |
|---|---|---|---|---|---|---|---|---|---|
| 120 | QC9- Inspect visual per QSI004- Fusion Welds | 0.00 | | | | 10 | 0 | | 11/03/10 |
| QC | Memo | 0.00 | | | | | | | |
| Quality Control | | | | | | | | | |
| 130 | QC5- Inspect part completeness to step on W/O | 0.00 | | | | 10 | | | |
| QC | Memo | 0.00 Sillos/11 | | | | RH | | | |
| Quality Control | | | | | | | | | |
| 140 | Chemical Conversion Coat per QSI005 4.1 | 0.00 | | | | | | | |
| HandFinish | Memo | 0.00 | | | | | | | |
| Hand Finishing | | | | | | | | | |

11-03-11 10

Dart Aerospace Ltd

| W/O: | | WORK ORDER CHANGES | | | | | |
|---|---|---|---|---|---|---|---|
| DATE | STEP | PROCEDURE CHANGE | By | Date | Qty | Approval Chief Eng / Prod Mgr | Approval QC Inspector |
| | | | | | | | |
| | | | | | | | |

**Part No:** _____ **PAR #:** _____ **Fault Category:** _____ **NCR:** Yes No **DQA:** _____ **Date:** _____

**Resolution:** _____ **Disposition:** _____ **QA: N/C Closed:** _____ **Date:** _____

| NCR: | | WORK ORDER NON-CONFORMANCE (NCR) | | | | | | |
|---|---|---|---|---|---|---|---|---|
| DATE | STEP | Description of NC Section A | Corrective Action Section B | | | Verification Section C | Approval Chief Eng | Approval QC Inspector |
| | | | Initial Chief Eng | Action Description Chief Eng | Sign & Date | | | |
| | | | | | | | | |
| | | | | | | | | |
| | | | | | | | | |

**NOTE:** Date & initial all entries

H:\fFORMS\Quality Assurance\approved QA\NCRWO RevE

# Work Order ID 66622

*Wednesday, February 23, 2011 8:07:23 AM*



**Item ID:** D350-591-312 **Accept** **Setup Start** **Stop**

**Revision ID:**

**Item Name:** Heli-Access-Step, Long RH

**Start Date:** 2/23/2011 **Start Qty:** 10.00 **Cust Item ID:**

**Required Date:** 3/18/2011 **Req'd Qty:** 10.00 **Customer:**

**Reference:**

**Run Start** **Stop**

**Approvals:** **Process Plan:** _____ **Date:** _____ **Tooling:** _____ **Date:** _____

**QC:** _____ **Date:** _____ **SPC (Y/N):** _____ **Date:** _____

| Sequence ID/ Work Center ID | Operation Description | Set Up/ Run Hours | Tool ID | Tool # | Plan Code | Accept Qty | Reject Qty | Reject Number | Insp. Stamp |
|---|---|---|---|---|---|---|---|---|---|
| 150 | QC3- Inspect Part Finish | 0.00 | 11·03·15 | | | 10 | Ø | | |
| QC | **Memo** | 0.00 | | | | | | | |
| Quality Control | | | | | | | | | |
| 180 | | 0.00 | | | | | | | |
| Large Fab | Large Fab | | | | | 10 | Ø | | |
| Large Fab | **Memo** | 0.00 | 11·03·16 | | | | | | |

1-Assemble Leg Assembly as per Dwg D3272.

2-Leave one rivet out until welding is complete.

3-Bevel Aft end for welding

4-Inspect for foreign object as per QSI 024

5-Weld Aft End Plate as per QSI 004 & Dwg D3272
A/R Aluminum Rod M108436

6-Grind End Plate flush

7-Install last rivet as per Dwg.

Dart Aerospace Ltd

| W/O: | | WORK ORDER CHANGES | | | | | |
|---|---|---|---|---|---|---|---|
| DATE | STEP | PROCEDURE CHANGE | By | Date | Qty | Approval Chief Eng / Prod Mgr | Approval QC Inspector |
| | | | | | | | |
| | | | | | | | |

**Part No:** _____ **PAR #:** _____ **Fault Category:** _____ **NCR:** Yes No **DQA:** _____ **Date:** _____

**Resolution:** _____ **Disposition:** _____ **QA: N/C Closed:** _____ **Date:** _____

| NCR: | | WORK ORDER NON-CONFORMANCE (NCR) | | | | | | |
|---|---|---|---|---|---|---|---|---|
| DATE | STEP | Description of NC Section A | Corrective Action Section B | | | Verification Section C | Approval Chief Eng | Approval QC Inspector |
| | | | Initial Chief Eng | Action Description Chief Eng | Sign & Date | | | |
| | | | | | | | | |
| | | | | | | | | |
| | | | | | | | | |

**NOTE:** Date & initial all entries

H:\fFORMS\Quality Assurance\approved QA\NCRWO RevE

# Work Order ID 66622

*Wednesday, February 23, 2011 8:07:23 AM*



**Item ID:** D350-591-312 **Accept** **Setup Start** **Stop**

**Revision ID:**

**Item Name:** Heli-Access-Step, Long RH

**Start Date:** 2/23/2011 **Start Qty:** 10.00 **Cust Item ID:**

**Required Date:** 3/18/2011 **Req'd Qty:** 10.00 **Customer:**

**Reference:**

**Run Start** **Stop**

**Approvals:** **Process Plan:** _____ **Date:** _____ **Tooling:** _____ **Date:** _____

**QC:** _____ **Date:** _____ **SPC (Y/N):** _____ **Date:** _____

| Sequence ID/ Work Center ID | Operation Description | Set Up/ Run Hours | Tool ID | Tool # | Plan Code | Accept Qty | Reject Qty | Reject Number | Insp. Stamp |
|---|---|---|---|---|---|---|---|---|---|
| 190 | QC10- Inspect visual per QSI004- ground welds | 0.00 | | | | 10 | Ø | | BEM 03/17 |
| QC Quality Control | Memo | 0.00 | | | | | | | |
| 200 | QC5- Inspect part completeness to step on W/O | 0.00 | SWL 03/17 | | | +10 RH | | | |
| QC Quality Control | Memo | 0.00 | | | | | | | |
| 210 | Chemical Conversion Coat per QSI005 4.1 | 0.00 | | | | 10 | BL 11-3-17 | | |
| HandFinish Hand Finishing | Memo | 0.00 | | | | | | | |

Dart Aerospace Ltd

| W/O: | | WORK ORDER CHANGES | | | | | |
|---|---|---|---|---|---|---|---|
| DATE | STEP | PROCEDURE CHANGE | By | Date | Qty | Approval Chief Eng / Prod Mgr | Approval QC Inspector |
| | | | | | | | |
| | | | | | | | |

**Part No:** _____ **PAR #:** _____ **Fault Category:** _____ **NCR:** Yes No **DQA:** _____ **Date:** _____

**Resolution:** _____ **Disposition:** _____ **QA: N/C Closed:** _____ **Date:** _____

| NCR: | | WORK ORDER NON-CONFORMANCE (NCR) | | | | | | |
|---|---|---|---|---|---|---|---|---|
| DATE | STEP | Description of NC Section A | Corrective Action Section B | | | Verification Section C | Approval Chief Eng | Approval QC Inspector |
| | | | Initial Chief Eng | Action Description Chief Eng | Sign & Date | | | |
| | | | | | | | | |
| | | | | | | | | |
| | | | | | | | | |

**NOTE:** Date & initial all entries

H:\fFORMS\Quality Assurance\approved QA\NCRWO RevE

# Work Order ID 66622

*Wednesday, February 23, 2011 8:07:23 AM*



**Item ID:** D350-591-312 **Accept** **Setup Start**

**Revision ID:** **Stop**

**Item Name:** Heli-Access-Step, Long RH

**Start Date:** 2/23/2011 **Start Qty:** 10.00 **Cust Item ID:**

**Required Date:** 3/18/2011 **Req'd Qty:** 10.00 **Customer:**

**Reference:**

**Run Start**

**Approvals:** **Process Plan:** _____ **Date:** _____ **Tooling:** _____ **Date:** _____

**Stop**

**QC:** _____ **Date:** _____ **SPC (Y/N):** _____ **Date:** _____

| Sequence ID/ Work Center ID | Operation Description | Set Up/ Run Hours | Tool ID | Tool # | Plan Code | Accept Qty | Reject Qty | Reject Number | Insp. Stamp |
|---|---|---|---|---|---|---|---|---|---|
| 220 | White Gloss(Ref:4.3.5.1) per QSI005 4.3-Alum | 0.00 | | | | | | | |
| Powdercoat | M115951 | | | | | 10 RH. | | 11-3-21. | |
| Powder Coating | **Memo** START TIME: 11:15 OVEN TEMPERATURE: 320° FINISH TIME: 11:45. | 0.00 | | | | | | | |
| 230 | Wing Walk as per dwg QSI005 4.4 Batch M116402 | 0.00 | | | | 10 X RH | | | |
| HandFinish | | | | | | | | | |
| Hand Finishing | **Memo** | 0.00 | | | | | | 11/03/22 | |
| 240 | QC3- Inspect Part Finish | 0.00 | | | | | | | |
| QC | | | | | | 10xRH | | 11/03/22 | |
| Quality Control | **Memo** | 0.00 | | | | | | | |

Dart Aerospace Ltd

| W/O: | | WORK ORDER CHANGES | | | | | |
|---|---|---|---|---|---|---|---|
| DATE | STEP | PROCEDURE CHANGE | By | Date | Qty | Approval Chief Eng / Prod Mgr | Approval QC Inspector |
| | | | | | | | |
| | | | | | | | |

**Part No:** _____ **PAR #:** _____ **Fault Category:** _____ **NCR:** Yes No **DQA:** _____ **Date:** _____

**Resolution:** _____ **Disposition:** _____ **QA: N/C Closed:** _____ **Date:** _____

| NCR: | | WORK ORDER NON-CONFORMANCE (NCR) | | | | | | |
|---|---|---|---|---|---|---|---|---|
| DATE | STEP | Description of NC Section A | Corrective Action Section B | | | Verification Section C | Approval Chief Eng | Approval QC Inspector |
| | | | Initial Chief Eng | Action Description Chief Eng | Sign & Date | | | |
| | | | | | | | | |
| | | | | | | | | |
| | | | | | | | | |

**NOTE:** Date & initial all entries

# Work Order ID 66622

*Wednesday, February 23, 2011 8:07:23 AM*



**Item ID:** D350-591-312 **Accept** **Setup Start** **Stop**

**Revision ID:**

**Item Name:** Heli-Access-Step, Long RH

**Start Date:** 2/23/2011 **Start Qty:** 10.00 **Cust Item ID:**

**Required Date:** 3/18/2011 **Req'd Qty:** 10.00 **Customer:**

**Reference:**

**Run Start** **Stop**

**Approvals:** **Process Plan:** _____ **Date:** _____ **Tooling:** _____ **Date:** _____

**QC:** _____ **Date:** _____ **SPC (Y/N):** _____ **Date:** _____

| Sequence ID/ Work Center ID | Operation Description | Set Up/ Run Hours | Tool ID | Tool # | Plan Code | Accept Qty | Reject Qty | Reject Number | Insp. Stamp |
|---|---|---|---|---|---|---|---|---|---|
| 250 | Pick Kit | 0.00 | | | | | | | |
| Packaging | | | | | | 11/3/2 | 05 | | 100 |
| Packaging | **Memo** | 0.00 | | | | | | | |
| 260 | QC4- 100% Inspect kits for completeness | 0.00 | | | | | | | |
| QC | | | | | | | | | |
| Quality Control | **Memo** | 0.00 | | | | | | | |
| 270 | | 0.00 | | | | | | | |
| Packaging | Packaging | | | | | | | | |
| Packaging | **Memo** | 0.00 | | | | | | | |

Identify and pack for shipping as per PPPD350-591-312
Location:_____

S u 03/23

NO RH

Feb 3/23 10

Dart Aerospace Ltd

| W/O: | | WORK ORDER CHANGES | | | | | |
|---|---|---|---|---|---|---|---|
| DATE | STEP | PROCEDURE CHANGE | By | Date | Qty | Approval Chief Eng / Prod Mgr | Approval QC Inspector |
| | | | | | | | |
| | | | | | | | |

**Part No:** _____ **PAR #:** _____ **Fault Category:** _____ **NCR:** Yes No **DQA:** _____ **Date:** _____

**Resolution:** _____ **Disposition:** _____ **QA: N/C Closed:** _____ **Date:** _____

| NCR: | | WORK ORDER NON-CONFORMANCE (NCR) | | | | | | |
|---|---|---|---|---|---|---|---|---|
| DATE | STEP | Description of NC Section A | Corrective Action Section B | | | Verification Section C | Approval Chief Eng | Approval QC Inspector |
| | | | Initial Chief Eng | Action Description Chief Eng | Sign & Date | | | |
| | | | | | | | | |
| | | | | | | | | |
| | | | | | | | | |

**NOTE:** Date & initial all entries

H:\FORMS\Quality Assurance\approved QA\NCRWO RevE

# Work Order ID 66622

*Wednesday, February 23, 2011 8:07:23 AM*



**Item ID:** D350-591-312 **Accept** **Setup Start**

**Revision ID:** **Stop**

**Item Name:** Heli-Access-Step, Long RH

**Start Date:** 2/23/2011 **Start Qty:** 10.00 **Cust Item ID:**

**Required Date:** 3/18/2011 **Req'd Qty:** 10.00 **Customer:**

**Reference:**

**Run Start**

**Approvals:** **Process Plan:** _____ **Date:** _____ **Tooling:** _____ **Date:** _____

**Stop**

**QC:** _____ **Date:** _____ **SPC (Y/N):** _____ **Date:** _____

| Sequence ID/ Work Center ID | Operation Description | Set Up/ Run Hours | Tool ID | Tool # | Plan Code | Accept Qty | Reject Qty | Reject Number | Insp. Stamp |
|---|---|---|---|---|---|---|---|---|---|
| 280 | QC21- Final Inspection - Work Order Release | 0.00 | | | | | | 11/3/23 | |
| QC<br>Quality Control | Memo | 0.00 | | | | | | | |

11-03-23
10

Dart Aerospace Ltd

| W/O: | | WORK ORDER CHANGES | | | | | |
|---|---|---|---|---|---|---|---|
| DATE | STEP | PROCEDURE CHANGE | By | Date | Qty | Approval Chief Eng / Prod Mgr | Approval QC Inspector |
| | | | | | | | |
| | | | | | | | |

**Part No:** _____ **PAR #:** _____ **Fault Category:** _____ **NCR:** Yes No **DQA:** _____ **Date:** _____

**Resolution:** _____ **Disposition:** _____ **QA: N/C Closed:** _____ **Date:** _____

| NCR: | | WORK ORDER NON-CONFORMANCE (NCR) | | | | | | |
|---|---|---|---|---|---|---|---|---|
| DATE | STEP | Description of NC Section A | Corrective Action Section B | | | Verification Section C | Approval Chief Eng | Approval QC Inspector |
| | | | Initial Chief Eng | Action Description Chief Eng | Sign & Date | | | |
| | | | | | | | | |
| | | | | | | | | |
| | | | | | | | | |

**NOTE:** Date & initial all entries

H:\fFORMS\Quality Assurance\approved QA\NCRWO RevE

# Picklist Print

*Wednesday, February 23, 2011 8:07:29 AM*



**Work Order ID:** 66622

**Parent Item:** D350-591-312

**Parent Item Name:** Heli-Access-Step, Long RH

**Start Date:** 2/23/2011 **Required Date:** 3/18/2011

**Start Qty:** 10.00 **Required Qty:** 10.00

**Comments:** IPP Rev:A□04.03.22□New issue □KJ/RF□
IPP Rev:B 07-06-09 Added D3572-1 JLM
IPP Rev:C 08-04-02 ECN1163 DD verified by:EC
IPP Rev:D 08-04-08 ECN1164 DD verified by:eC IPP Rev:D
fixe route seq in bom DD 10.04.28 verified by:EC

| Component Item ID/ Item Name | Replacement Item ID | Mfg/ Purch | Bin Item | Primary Location | Last Location | Route Seq ID | Unit of Measure | Qty on Hand | Qty per Kit | Total Qty | Qty Issued | Date Issued | Status |
|---|---|---|---|---|---|---|---|---|---|---|---|---|---|
| D3272-1 Step | | Manufactured | No | | | 110 | Each | 0.0000 | 1 | 10 | 11·03·08 | B66623 | |
| D3067-1 End Plate | | Manufactured | No | | | 110 | Each | 128.0000 | 1 | 10 | 11·03·09 | | |
| | | | | Location | | Loc Qty | | Loc Code | | | | | |
| | | | | WA | | 128 | | | | | | | |
| | | | | | 65969 | 128 | | | | 10 | | | |
| D3219-1 Plate | | Manufactured | No | | | 110 | Each | 135.0000 | 2 | 20 | 11·03·09 | | |
| | | | | Location | | Loc Qty | | Loc Code | | | | | |
| | | | | WA | | 135 | | | | | | | |
| | | | | | 63551 | 19 | | | | | | | |
| | | | | | 66133 | 116 | | | | 20 | | | |
| D3066-1 Spacer | | Manufactured | No | | | 180 | Each | 6.0000 | 2 | 20 | 11·03·15 | | |
| | | | | Location | | Loc Qty | | Loc Code | | | | | |
| | | | | WA | B66131 | 6 | | | | 14 | | | |
| | | | | | 65072 | 6 | | | | 6 | | | |

Dart Aerospace Ltd

| W/O: | | WORK ORDER CHANGES | | | | | |
|---|---|---|---|---|---|---|---|
| DATE | STEP | PROCEDURE CHANGE | By | Date | Qty | Approval Chief Eng / Prod Mgr | Approval QC Inspector |
| | | | | | | | |
| | | | | | | | |

**Part No:** _____ **PAR #:** _____ **Fault Category:** _____ **NCR:** Yes No **DQA:** _____ **Date:** _____

**Resolution:** _____ **Disposition:** _____ **QA: N/C Closed:** _____ **Date:** _____

| NCR: | | WORK ORDER NON-CONFORMANCE (NCR) | | | | | | |
|---|---|---|---|---|---|---|---|---|
| DATE | STEP | Description of NC Section A | Corrective Action Section B | | | Verification Section C | Approval Chief Eng | Approval QC Inspector |
| | | | Initial Chief Eng | Action Description Chief Eng | Sign & Date | | | |
| | | | | | | | | |
| | | | | | | | | |
| | | | | | | | | |

**NOTE:** Date & initial all entries

# Picklist Print

*Wednesday, February 23, 2011 8:07:29 AM*

**Work Order ID:** 66622

**Parent Item:** D350-591-312

**Parent Item Name:** Heli-Access-Step, Long RH

**Start Date:** 2/23/2011 **Required Date:** 3/18/2011

**Start Qty:** 10.00 **Required Qty:** 10.00

| | | | | | | | | |
|---|---|---|---|---|---|---|---|---|
| MS20600-AD4W4 | Purchased | No | 180 | Each | 2,263.000 | 16 | 160 | 11·03·15 |

Rivets

| Location | Loc Qty | Loc Code | |
|---|---|---|---|
| ST321 | 2263 | | |
| 113368 | 38 | | |
| 114181 | 11 | | |
| 114718 | 2 | | |
| 115573 | 70 | | |
| 115640 | 31 | | |
| 116022 | 4 | | |
| 116188 | 1500 | | |
| 116712 | 607 | | 160 |

| | | | | | | | | |
|---|---|---|---|---|---|---|---|---|
| D3065-041 | Manufactured | No | 180 | Each | 57.0000 | 1 | 10 | 11·03·15 |

Step Leg Assembly Hi

| Location | Loc Qty | Loc Code | |
|---|---|---|---|
| WA | 57 | | |
| 63554 | 17 | | 10 |
| 66149 | 40 | | |

| | | | | | | | | |
|---|---|---|---|---|---|---|---|---|
| D3067-1 | Manufactured | No | 180 | Each | 128.0000 | 1 | 10 | 11·03·15 |

End Plate

| Location | Loc Qty | Loc Code | |
|---|---|---|---|
| WA | 128 | | |
| 65969 | 128 | | 10 |

Dart Aerospace Ltd

| W/O: | | WORK ORDER CHANGES | | | | | |
|---|---|---|---|---|---|---|---|
| DATE | STEP | PROCEDURE CHANGE | By | Date | Qty | Approval Chief Eng / Prod Mgr | Approval QC Inspector |
| | | | | | | | |
| | | | | | | | |

**Part No:** _____ **PAR #:** _____ **Fault Category:** _____ **NCR:** Yes No **DQA:** _____ **Date:** _____

**Resolution:** _____ **Disposition:** _____ **QA: N/C Closed:** _____ **Date:** _____

| NCR: | | WORK ORDER NON-CONFORMANCE (NCR) | | | | | | |
|---|---|---|---|---|---|---|---|---|
| DATE | STEP | Description of NC Section A | Corrective Action Section B | | | Verification Section C | Approval Chief Eng | Approval QC Inspector |
| | | | Initial Chief Eng | Action Description Chief Eng | Sign & Date | | | |
| | | | | | | | | |
| | | | | | | | | |
| | | | | | | | | |

**NOTE:** Date & initial all entries

H:\fFORMS\Quality Assurance\approved QA\NCRWO RevE

# Picklist Print

*Wednesday, February 23, 2011 8:07:30 AM*

**Work Order ID:** 66622

**Parent Item:** D350-591-312

**Parent Item Name:** Heli-Access-Step, Long RH

**Start Date:** 2/23/2011 **Required Date:** 3/18/2011

**Start Qty:** 10.00 **Required Qty:** 10.00

| | | | | | | | | |
|---|---|---|---|---|---|---|---|---|
| AN3-35A<br>Bolt | Purchased | No | | 250 | Each | 102.0000 | 2 | 20 M117094 11/3/21 |

| Location | Loc Qty | Loc Code |
|---|---|---|
| ST353 | 102 | |
| 116191 | 100 | |
| 116704 | 2 | |

| | | | | | | | | |
|---|---|---|---|---|---|---|---|---|
| D3235-1<br>Mounting Lug | Manufactured | No | | 250 | Each | 0.0000 | 2 | 20 B65073 11/3/21 |
| D3278-041<br>Support Assembly | Manufactured | No | | 250 | Each | 1.0000 | 1 | 10 B66155 11/3/21 |

| Location | Loc Qty | Loc Code |
|---|---|---|
| ST471 | 1 | |
| 63553 | 1 | |

| | | | | | | | | |
|---|---|---|---|---|---|---|---|---|
| AN960JD416<br>Washer | NAS1149D0463J | Purchased | No | 250 | Each | 30.0000 | 16 | 160 M117065 11/3/21 12 |

| Location | Loc Qty | Loc Code |
|---|---|---|
| ST300 | 24 | |
| 113288 | 24 | |
| ST356 | 6 | |
| 115622 | 6 | |

Dart Aerospace Ltd

| W/O: | | WORK ORDER CHANGES | | | | | |
|---|---|---|---|---|---|---|---|
| DATE | STEP | PROCEDURE CHANGE | By | Date | Qty | Approval Chief Eng / Prod Mgr | Approval QC Inspector |
| | | | | | | | |
| | | | | | | | |

**Part No:** _____ **PAR #:** _____ **Fault Category:** _____ **NCR:** Yes No **DQA:** _____ **Date:** _____

**Resolution:** _____ **Disposition:** _____ **QA: N/C Closed:** _____ **Date:** _____

| NCR: | | WORK ORDER NON-CONFORMANCE (NCR) | | | | | | |
|---|---|---|---|---|---|---|---|---|
| DATE | STEP | Description of NC Section A | Corrective Action Section B | | | Verification Section C | Approval Chief Eng | Approval QC Inspector |
| | | | Initial Chief Eng | Action Description Chief Eng | Sign & Date | | | |
| | | | | | | | | |
| | | | | | | | | |
| | | | | | | | | |

**NOTE:** Date & initial all entries

# Picklist Print

*Wednesday, February 23, 2011 8:07:30 AM*

**Work Order ID:** 66622

**Parent Item:** D350-591-312

**Parent Item Name:** Heli-Access-Step, Long RH

**Start Date:** 2/23/2011 **Required Date:** 3/18/2011

**Start Qty:** 10.00 **Required Qty:** 10.00

| | | | | | | | | | |
|---|---|---|---|---|---|---|---|---|---|
| AN960JD516 | NAS1149D0563J | Purchased | No | 250 | Each | 34.0000 | 4 | 40 | M116540 M116702 11/3/21 |

Washer

| Location | Loc Qty | Loc Code |
|---|---|---|
| ST | 34 | |
| 103694 | 18 | |
| 107534 | 12 | |
| 109287 | 4 | |

| | | | | | | | | | |
|---|---|---|---|---|---|---|---|---|---|
| AN5-36A | | Purchased | No | 250 | Each | 157.0000 | 2 | 20 | 11/3/21 |

Bolt

| Location | Loc Qty | Loc Code |
|---|---|---|
| ST341 | 157 | |
| 114292 | 1 | |
| 116191 | 6 | |
| 116549 | 50 | 20 |
| 116704 | 100 | |

| | | | | | | | | | |
|---|---|---|---|---|---|---|---|---|---|
| D2618 | | Manufactured | No | 250 | Each | 83.0000 | 2 | 20 | 11/3/21 100 |

Bushing

| Location | Loc Qty | Loc Code |
|---|---|---|
| ST019 | 83 | |
| 65071 | 3 | |
| 66132 | 80 | 20 |

Dart Aerospace Ltd

| W/O: | | WORK ORDER CHANGES | | | | | |
|---|---|---|---|---|---|---|---|
| DATE | STEP | PROCEDURE CHANGE | By | Date | Qty | Approval Chief Eng / Prod Mgr | Approval QC Inspector |
| | | | | | | | |
| | | | | | | | |

**Part No:** _____ **PAR #:** _____ **Fault Category:** _____ **NCR:** Yes No **DQA:** _____ **Date:** _____

**Resolution:** _____ **Disposition:** _____ **QA: N/C Closed:** _____ **Date:** _____

| NCR: | | WORK ORDER NON-CONFORMANCE (NCR) | | | | | | |
|---|---|---|---|---|---|---|---|---|
| DATE | STEP | Description of NC Section A | Corrective Action Section B | | | Verification Section C | Approval Chief Eng | Approval QC Inspector |
| | | | Initial Chief Eng | Action Description Chief Eng | Sign & Date | | | |
| | | | | | | | | |
| | | | | | | | | |
| | | | | | | | | |

**NOTE:** Date & initial all entries

# Picklist Print

*Wednesday, February 23, 2011 8:07:30 AM*



**Work Order ID:** 66622

**Parent Item:** D350-591-312

**Parent Item Name:** Heli-Access-Step, Long RH

**Start Date:** 2/23/2011 **Required Date:** 3/18/2011

**Start Qty:** 10.00 **Required Qty:** 10.00

| | | | | | | | | |
|---|---|---|---|---|---|---|---|---|
| D2230-3 | Manufactured | No | | 250 | Each | 6.0000 | 4 | 40 |

Lug

| Location | Loc Qty | Loc Code |
|---|---|---|
| Return 2010 | 4 | |
| 62927 | 2 | |
| 63544 | 2 | |
| ST476 | 2 | |
| 55452 | 2 | |

| | | | | | | | | |
|---|---|---|---|---|---|---|---|---|
| D2856-400 | Manufactured | No | | 250 | f | 188.3980 | 1.2 | 12 |

Abraison Strip

| Location | Loc Qty | Loc Code |
|---|---|---|
| ST403 | 188.3980421 | |
| 56626 | 0.00004211 | |
| 59920 | 43.381 | |
| 63735 | 145.017 | |

cut (2) D2856-400-720 as per dwg

| | | | | | | | | |
|---|---|---|---|---|---|---|---|---|
| MS21042L3 | Purchased | No | | 250 | Each | 2,704.000 | 2 | 20 |

Nut

| Location | Loc Qty | Loc Code |
|---|---|---|
| ST300 | 2704 | |
| 110844 | 4 | |
| 114784 | 9 | |
| 115835 | 191 | |
| 116391 | 900 | |
| 116540 | 800 | |
| 116549 | 800 | |

Dart Aerospace Ltd

| W/O: | | WORK ORDER CHANGES | | | | | |
|---|---|---|---|---|---|---|---|
| DATE | STEP | PROCEDURE CHANGE | By | Date | Qty | Approval Chief Eng / Prod Mgr | Approval QC Inspector |
| | | | | | | | |
| | | | | | | | |

**Part No:** _____ **PAR #:** _____ **Fault Category:** _____ **NCR:** Yes No **DQA:** _____ **Date:** _____

**Resolution:** _____ **Disposition:** _____ **QA: N/C Closed:** _____ **Date:** _____

| NCR: | | WORK ORDER NON-CONFORMANCE (NCR) | | | | | | |
|---|---|---|---|---|---|---|---|---|
| DATE | STEP | Description of NC Section A | Corrective Action Section B | | | Verification Section C | Approval Chief Eng | Approval QC Inspector |
| | | | Initial Chief Eng | Action Description Chief Eng | Sign & Date | | | |
| | | | | | | | | |
| | | | | | | | | |
| | | | | | | | | |

**NOTE:** Date & initial all entries

H:\FORMS\Quality Assurance\approved QA\NCRWO RevE

# Picklist Print

*Wednesday, February 23, 2011 8:07:31 AM*

**Work Order ID:** 66622

**Parent Item:** D350-591-312

**Parent Item Name:** Heli-Access-Step, Long RH

**Start Date:** 2/23/2011 **Required Date:** 3/18/2011

**Start Qty:** 10.00 **Required Qty:** 10.00

| | | | | | | | | |
|---|---|---|---|---|---|---|---|---|
| AN4-13A Bolt | Purchased | No | 250 | Each | 486.0000 | 8 | 80 | 11/3/21 |

| Location | Loc Qty | Loc Code |
|---|---|---|
| ST357 | 486 | |
| 116191 | 7 | |
| 116669 | 179 | |
| 116786 | 300 | 80 |

| | | | | | | | | |
|---|---|---|---|---|---|---|---|---|
| MS21042L5 Nut | Purchased | No | 250 | Each | 1,030.000 | 2 | 20 | 11/3/21 |

| Location | Loc Qty | Loc Code |
|---|---|---|
| ST139 | 26 | |
| 114813 | 26 | |
| ST300 | 1004 | |
| 115594 | 308 | 20 |
| 116105 | 496 | |
| 116548 | 200 | |

| | | | | | | | | |
|---|---|---|---|---|---|---|---|---|
| MS21042L4 Nut | Purchased | No | 250 | Each | 5,182.000 | 8 | 80 | 11/3/21 (102) |

| Location | Loc Qty | Loc Code |
|---|---|---|
| ST300 | 5182 | |
| 1123143 | 2 | |
| 115589 | 10 | |
| 115621 | 20 | |
| 116188 | 3150 | 80 |
| 116823 | 2000 | |

Dart Aerospace Ltd

| W/O: | | WORK ORDER CHANGES | | | | | |
|---|---|---|---|---|---|---|---|
| DATE | STEP | PROCEDURE CHANGE | By | Date | Qty | Approval Chief Eng / Prod Mgr | Approval QC Inspector |
| | | | | | | | |
| | | | | | | | |

**Part No:** _____ **PAR #:** _____ **Fault Category:** _____ **NCR:** Yes No **DQA:** _____ **Date:** _____

**Resolution:** _____ **Disposition:** _____ **QA: N/C Closed:** _____ **Date:** _____

| NCR: | | WORK ORDER NON-CONFORMANCE (NCR) | | | | | | |
|---|---|---|---|---|---|---|---|---|
| DATE | STEP | Description of NC Section A | Corrective Action Section B | | | Verification Section C | Approval Chief Eng | Approval QC Inspector |
| | | | Initial Chief Eng | Action Description Chief Eng | Sign & Date | | | |
| | | | | | | | | |
| | | | | | | | | |
| | | | | | | | | |

**NOTE:** Date & initial all entries

H:\fFORMS\Quality Assurance\approved QA\NCRWO RevE

# Picklist Print

*Wednesday, February 23, 2011 8:07:31 AM*

**Work Order ID:** 66622

**Parent Item:** D350-591-312

**Parent Item Name:** Heli-Access-Step, Long RH

**Start Date:** 2/23/2011 **Required Date:** 3/18/2011

**Start Qty:** 10.00 **Required Qty:** 10.00

| | | | | | | | | | |
|---|---|---|---|---|---|---|---|---|---|
| AN960JD10 | NAS1149D0363J | Purchased | No | 250 | Each | 24.0000 | 4 | 40 | M116583 alg hed |

Washer

| Location | | Loc Qty | Loc Code |
|---|---|---|---|
| ST | | 6 | |
| | 107715 | 6 | |
| ST335 | | 18 | |
| | 105792 | 2 | |
| | 112279 | 16 | |

Dart Aerospace Ltd

| W/O: | | WORK ORDER CHANGES | | | | | |
|---|---|---|---|---|---|---|---|
| DATE | STEP | PROCEDURE CHANGE | By | Date | Qty | Approval Chief Eng / Prod Mgr | Approval QC Inspector |
| | | | | | | | |
| | | | | | | | |

**Part No:** _____ **PAR #:** _____ **Fault Category:** _____ **NCR:** Yes No **DQA:** _____ **Date:** _____

**Resolution:** _____ **Disposition:** _____ **QA: N/C Closed:** _____ **Date:** _____

| NCR: | | WORK ORDER NON-CONFORMANCE (NCR) | | | | | | |
|---|---|---|---|---|---|---|---|---|
| DATE | STEP | Description of NC Section A | Corrective Action Section B | | | Verification Section C | Approval Chief Eng | Approval QC Inspector |
| | | | Initial Chief Eng | Action Description Chief Eng | Sign & Date | | | |
| | | | | | | | | |
| | | | | | | | | |
| | | | | | | | | |

**NOTE:** Date & initial all entries

H:\FORMS\Quality Assurance\approved QA\NCRWO RevE

| DESIGN | DRAWN BY | DART AEROSPACE LTD<br>HAWKESBURY, ONTARIO, CANADA | |
|---|---|---|---|
| CHECKED | APPROVED | DRAWING NO.<br>D3272 | REV. B<br>SHEET 1 OF 3 |
| DATE<br>07.05.18 | | TITLE<br>STEP ASSEMBLY, HI LONG | SCALE<br>NTS |

| | | |
|---|---|---|
| A | 04.03.01 | NEW ISSUE |
| B | 07.05.18 | D3272–1 WAS D2622–120 |

**RELEASED**
07 06 04

| QTY -041 | QTY -042 | PART NUMBER | DESCRIPTION |
|---|---|---|---|
| X | | **D3272-041** | **STEP ASSEMBLY, HIGH LONG (LH)** |
| | X | **D3272-042** | **STEP ASSEMBLY, HIGH LONG (RH)** |
| | | | |
| 1 | 1 | D3065-041 | LEG ASSEMBLY |
| 2 | 2 | D3066-1 | SPACER |
| 2 | 2 | D3067-1 | END PLATE |
| 2 | 2 | D3219-1 | SUPPORT |
| 1 | 1 | D3272-1 | STEP |
| | | | |
| 16 | 16 | MS20600AD4W4 | RIVET |
| | | | |

B

**GENERAL NOTES:**

1) D3272-041 SHOWN. FOR D3272-042, INSTALL D3219-1 SUPPORT OPPOSITE SIDE
2) WELD PER DART QSI 004
3) FINISH: CHEMICAL CONVERSION COAT PER DART QSI 005.4.1
   POWDER COAT ASSEMBLY WHITE (4.3.5.1) PER DART QSI 005 4.3
   BLACK ANTI-SKID PAINT PER DART QSI 005 4.4
4) TOLERANCES ARE PER DART QSI 018 UNLESS OTHERWISE NOTED.
5) ALL DIMENSIONS ARE IN INCHES UNLESS OTHERWISE NOTED.
6) BREAK ALL SHARP EDGES 0.005 TO 0.010 MAX.

SHOP COPY
RETURN TO
ENGINEERING
UNCONTROLLED COPY
SUBJECT TO AMENDMENT
WITHOUT NOTICE
WORK ORDER
NO. 11-02-23

**Copyright © 2004 by DART AEROSPACE LTD**
THIS DOCUMENT IS PRIVATE AND CONFIDENTIAL AND IS SUPPLIED ON THE EXPRESS CONDITION THAT IT IS NOT TO BE USED FOR ANY PURPOSE OR COPIED OR COMMUNICATED TO ANY OTHER PERSON WITHOUT WRITTEN PERMISSION FROM DART AEROSPACE LTD.

Dart Aerospace Ltd

| W/O: | | WORK ORDER CHANGES | | | | | |
|---|---|---|---|---|---|---|---|
| DATE | STEP | PROCEDURE CHANGE | By | Date | Qty | Approval Chief Eng / Prod Mgr | Approval QC Inspector |
| | | | | | | | |
| | | | | | | | |

**Part No:** _____ **PAR #:** _____ **Fault Category:** _____ **NCR:** Yes No **DQA:** _____ **Date:** _____

**Resolution:** _____ **Disposition:** _____ **QA: N/C Closed:** _____ **Date:** _____

| NCR: | | WORK ORDER NON-CONFORMANCE (NCR) | | | | | | |
|---|---|---|---|---|---|---|---|---|
| DATE | STEP | Description of NC Section A | Corrective Action Section B | | | Verification Section C | Approval Chief Eng | Approval QC Inspector |
| | | | Initial Chief Eng | Action Description Chief Eng | Sign & Date | | | |
| | | | | | | | | |
| | | | | | | | | |
| | | | | | | | | |

**NOTE:** Date & initial all entries

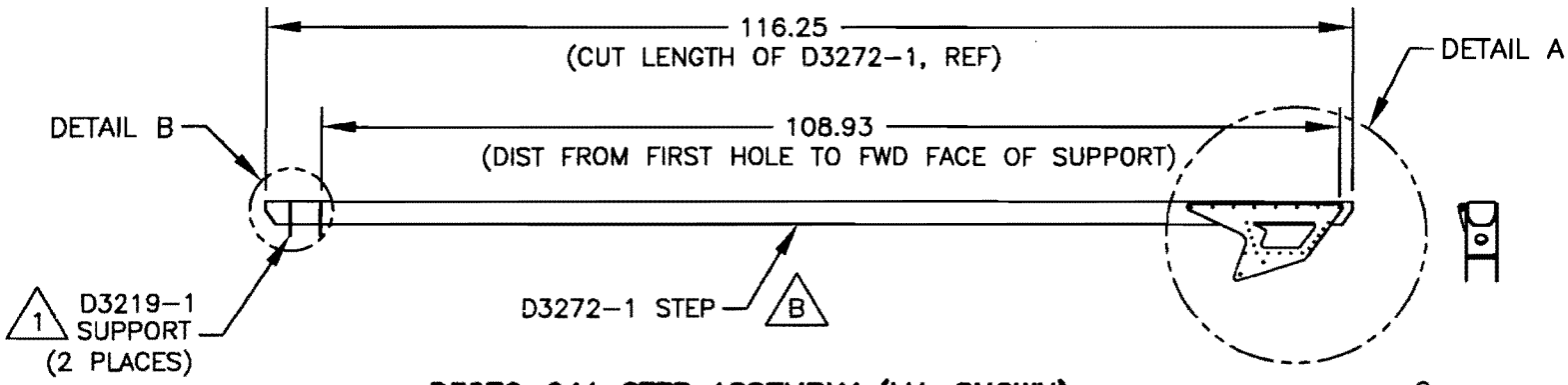


**D3272-041 STEP ASSEMBLY (LH, SHOWN)**

D3272-042 STEP ASSEMBLY (RH, OPPOSITE)

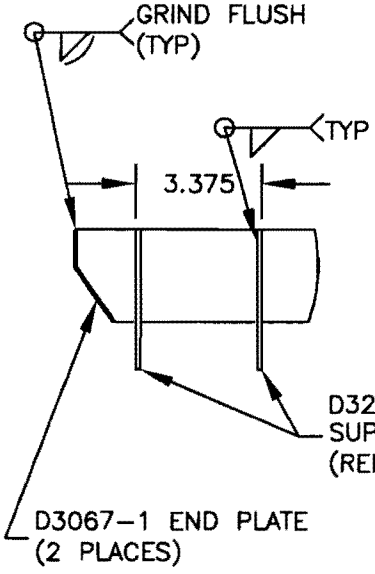


**DETAIL B**
(SCALE 1:5)

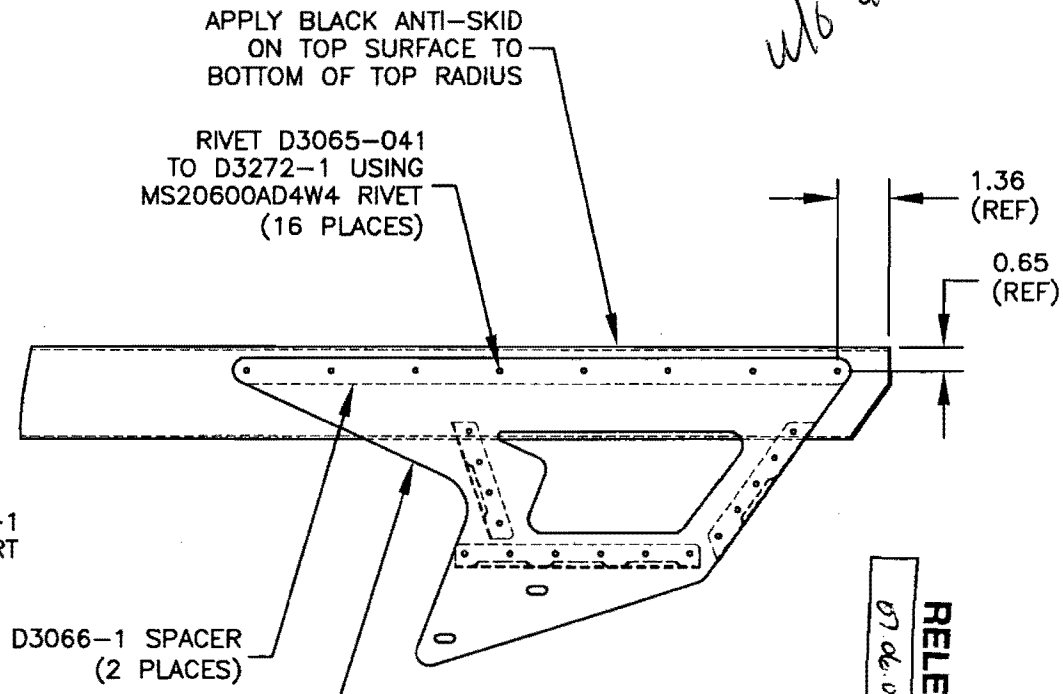


**DETAIL A**
(SCALE 1:5)

RELEASED
07.06.04

| | | | |
|---|---|---|---|
| DESIGN | DRAWN BY | DART AEROSPACE LTD<br>HAWKESBURY, ONTARIO, CANADA | |
| CHECKED | APPROVED | DRAWING NO. D3272 | REV. B |
| DATE 07.05.18 | | TITLE STEP ASSEMBLY, HI LONG | SHEET 2 OF 3 |
| | | | SCALE 1:20 |

**Copyright © 2004 by DART AEROSPACE LTD**
THIS DOCUMENT IS PRIVATE AND CONFIDENTIAL AND IS SUPPLIED ON THE EXPRESS CONDITION THAT IT IS NOT TO BE USED FOR ANY PURPOSE OR COPIED OR COMMUNICATED TO ANY OTHER PERSON WITHOUT WRITTEN PERMISSION FROM DART AEROSPACE LTD.

Dart Aerospace Ltd

| W/O: | | WORK ORDER CHANGES | | | | | |
|---|---|---|---|---|---|---|---|
| DATE | STEP | PROCEDURE CHANGE | By | Date | Qty | Approval Chief Eng / Prod Mgr | Approval QC Inspector |
| | | | | | | | |
| | | | | | | | |

**Part No:** _____ **PAR #:** _____ **Fault Category:** _____ **NCR:** Yes No **DQA:** _____ **Date:** _____

**Resolution:** _____ **Disposition:** _____ **QA: N/C Closed:** _____ **Date:** _____

| NCR: | | WORK ORDER NON-CONFORMANCE (NCR) | | | | | | |
|---|---|---|---|---|---|---|---|---|
| DATE | STEP | Description of NC Section A | Corrective Action Section B | | | Verification Section C | Approval Chief Eng | Approval QC Inspector |
| | | | Initial Chief Eng | Action Description Chief Eng | Sign & Date | | | |
| | | | | | | | | |
| | | | | | | | | |
| | | | | | | | | |

**NOTE:** Date & initial all entries

| DESIGN | DRAWN BY | DART AEROSPACE LTD<br>HAWKESBURY, ONTARIO, CANADA | |
|---|---|---|---|
| CHECKED | APPROVED | DRAWING NO.<br>D3272 | REV. B<br>SHEET 3 OF 3 |
| DATE<br>07.05.18 | | TITLE<br>STEP ASSEMBLY, HI LONG | SCALE<br>1:20 |

**RELEASED**
07.06.04

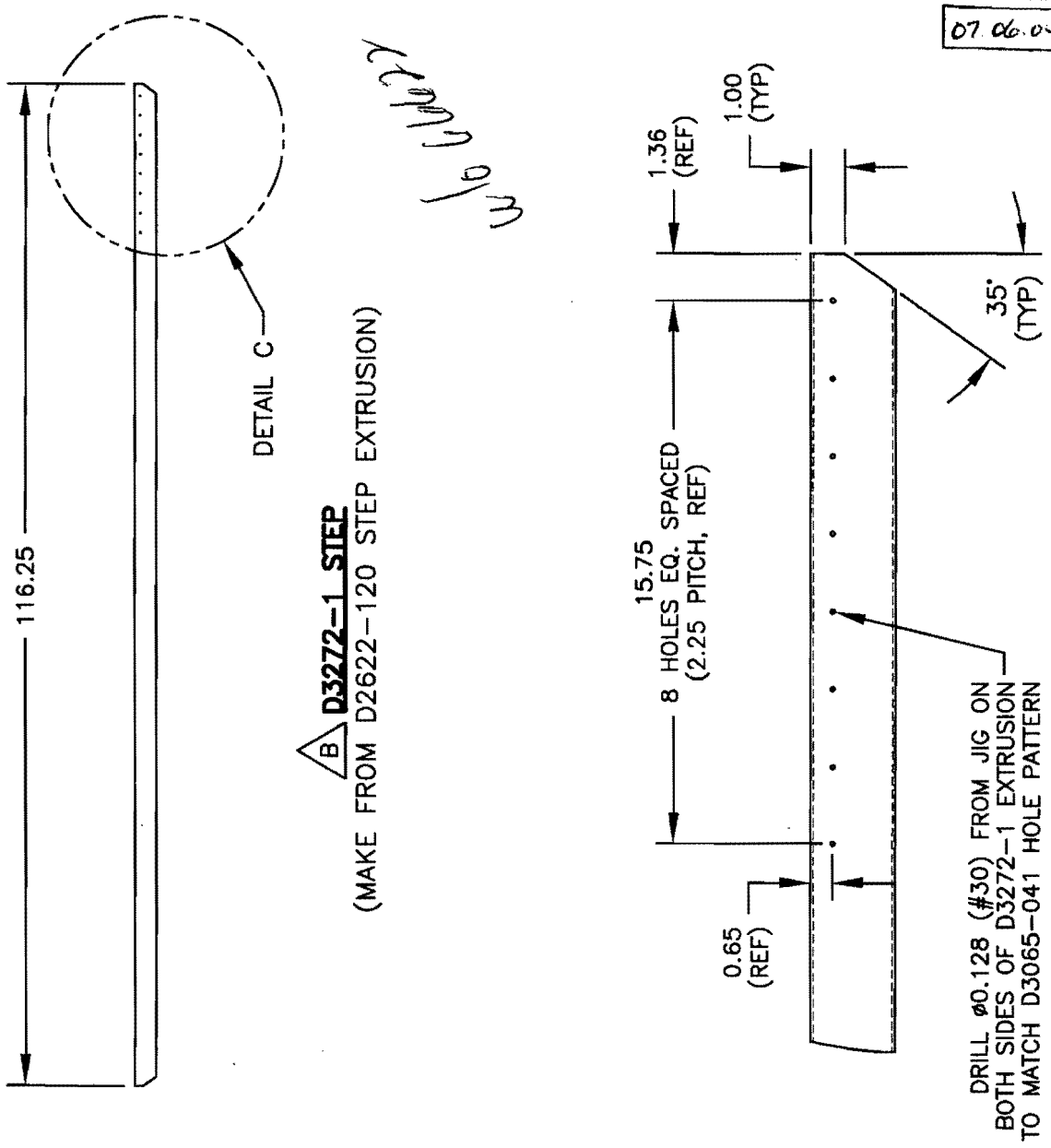



**Copyright © 2004 by DART AEROSPACE LTD**

THIS DOCUMENT IS PRIVATE AND CONFIDENTIAL AND IS SUPPLIED ON THE EXPRESS CONDITION THAT IT IS NOT TO BE USED FOR ANY PURPOSE OR COPIED OR COMMUNICATED TO ANY OTHER PERSON WITHOUT WRITTEN PERMISSION FROM DART AEROSPACE LTD.

Dart Aerospace Ltd

| W/O: | | WORK ORDER CHANGES | | | | | |
|---|---|---|---|---|---|---|---|
| DATE | STEP | PROCEDURE CHANGE | By | Date | Qty | Approval Chief Eng / Prod Mgr | Approval QC Inspector |
| | | | | | | | |
| | | | | | | | |

**Part No:** _____ **PAR #:** _____ **Fault Category:** _____ **NCR:** Yes No **DQA:** _____ **Date:** _____

**Resolution:** _____ **Disposition:** _____ **QA: N/C Closed:** _____ **Date:** _____

| NCR: | | WORK ORDER NON-CONFORMANCE (NCR) | | | | | | |
|---|---|---|---|---|---|---|---|---|
| DATE | STEP | Description of NC Section A | Corrective Action Section B | | | Verification Section C | Approval Chief Eng | Approval QC Inspector |
| | | | Initial Chief Eng | Action Description Chief Eng | Sign & Date | | | |
| | | | | | | | | |
| | | | | | | | | |
| | | | | | | | | |

**NOTE:** Date & initial all entries

| Qty -211 | Qty -212 | Qty -213 | Qty -214 | Qty -215 | Qty -216 | Qty -311 | Qty -312 | Part Number | Description |
|---|---|---|---|---|---|---|---|---|---|
| X | | | | | | | | D350-591-211 | ***Heli-Access-Step***™, Long Step – High Skid, LH |
| | X | | | | | | | D350-591-212 | ***Heli-Access-Step***™, Long Step – High Skid, RH |
| | | X | | | | | | D350-591-213 | ***Heli-Access-Step***™, Short Step – High Skid, LH |
| | | | X | | | | | D350-591-214 | ***Heli-Access-Step***™, Short Step – High Skid, RH |
| | | | | X | | | | D350-591-215 | ***Heli-Access-Step***™, Short Step – Low Skid, LH |
| | | | | | X | | | D350-591-216 | ***Heli-Access-Step***™, Short Step – Low Skid, RH |
| | | | | | | X | | D350-591-311 | ***Heli-Access-Step***™, Long Step – High Skid, LH |
| | | | | | | | X | D350-591-312 | ***Heli-Access-Step***™, Long Step – High Skid, RH |
| | | | | | | | | | |
| 1 | | | | | | | | D3070-041 | STEP ASSEMBLY (HIGH-LONG, LH) |
| | 1 | | | | | | | D3070-042 | STEP ASSEMBLY (HIGH-LONG, RH) |
| | | 1 | | | | | | D3078-041 | STEP ASSEMBLY (HIGH-SHORT, LH) |
| | | | 1 | | | | | D3078-042 | STEP ASSEMBLY (HIGH-SHORT, RH) |
| | | | | 1 | | | | D3168-041 | STEP ASSEMBLY (LOW-SHORT, LH) |
| | | | | | 1 | | | D3168-042 | STEP ASSEMBLY (LOW-SHORT, RH) |
| | | | | | | 1 | | D3272-041 | STEP ASSEMBLY (HIGH-LONG, LH) |
| | | | | | | | 1 | D3272-042 | STEP ASSEMBLY (HIGH-LONG, RH) |
| 4 | 4 | | | | | | | D2182B035 | RUBBER CUSHION |
| | | 2 | 2 | 2 | 2 | | | D2230-1 | MOUNTING LUG |
| | | 2 | 2 | 2 | 2 | 4 | 4 | D2230-3 | MOUNTING LUG |
| 8 | 8 | | | | | | | D2274 | RADIUS BLOCK |
| | | | | | | 2 | 2 | D2618 | BUSHING |
| 4 | 4 | 4 | 4 | 4 | 4 | | | D2732-030 | CUSHION |
| 2 | 2 | 1 | 1 | 1 | 1 | 2 | 2 | D2856-400-720 | ABRASION STRIP |
| 2 | 2 | | | | | | | D3064-1 | CLAMP |
| 1 | 1 | | | | | | | D3079-041 | SUPPORT ASSEMBLY |
| 4 | 4 | | | | | | | D3080-1 | CLAMP |
| | | | | | | 2 | 2 | D3235-1 | MOUNTING LUG |
| | | | | | | 1 | 1 | D3278-041 | SUPPORT ASSEMBLY |
| | | | | | | | | | |
| 2 | 2 | 2 | 2 | 2 | 2 | 2 | 2 | AN3-35A | BOLT |
| 10 | 10 | 2 | 2 | 2 | 2 | | | AN4-11A | BOLT |
| | | 4 | 4 | 4 | 4 | 8 | 8 | AN4-13A | BOLT |
| | | | | | | 2 | 2 | AN5-36A | BOLT |
| 4 | 4 | 4 | 4 | 4 | 4 | 4 | 4 | AN960JD10 | WASHER |
| 20 | 20 | 12 | 12 | 12 | 12 | 16 | 16 | AN960JD416 | WASHER |
| | | | | | | 4 | 4 | AN960JD516 | WASHER |
| 2 | 2 | 2 | 2 | 2 | 2 | 2 | 2 | MS21042L3 | NUT |
| 10 | 10 | 6 | 6 | 6 | 6 | 8 | 8 | MS21042L4 | NUT |
| | | | | | | 2 | 2 | MS21042L5 | NUT |
| | | | | | | 1 | 1 | *DSI 9410-011 | STEP MODIFICATION KIT |

*DSI 9410-011 Step Modification Kits are provided with all D350-591-311 and D350-591-312 Steps. This kit is provided as an option for the installer and is therefore **NOT REQUIRED** to complete the installation of the D350-591-311 or D350-591-312 Steps. Refer to Figure 21 for installation of the DSI 9410-011 Kit.

• COPYRIGHT © 1993 BY DART AEROSPACE LTD •
THIS DOCUMENT IS PRIVATE AND CONFIDENTIAL AND IS SUPPLIED ON THE EXPRESS CONDITION THAT IT IS NOT TO BE USED FOR ANY PURPOSE OR COPIED OR COMMUNICATED TO ANY OTHER PERSON WITHOUT WRITTEN PERMISSION FROM DART AEROSPACE LTD.